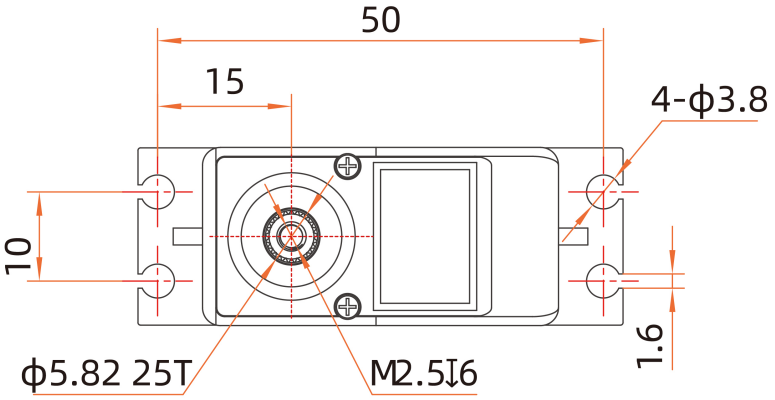
50
15
4-ϕ3.8
10
1.6
ϕ5.82 25T
M2.5↧6

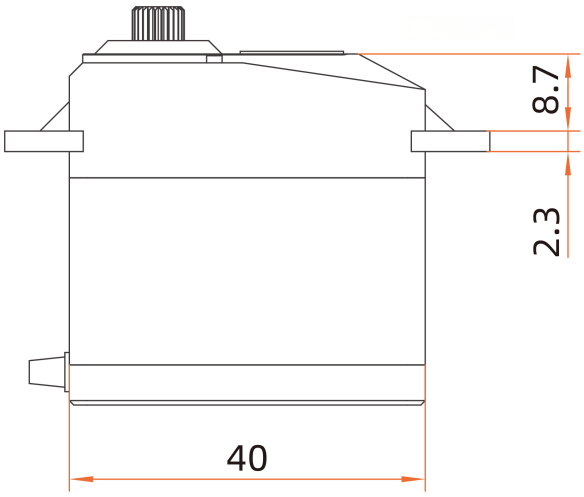
8.7
2.3
40

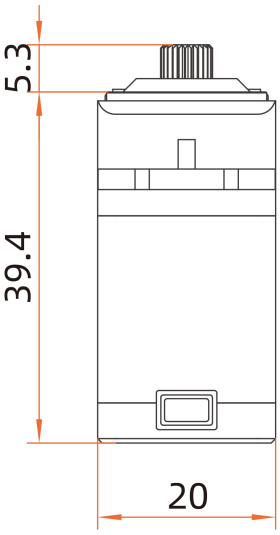
5.3
39.4
20