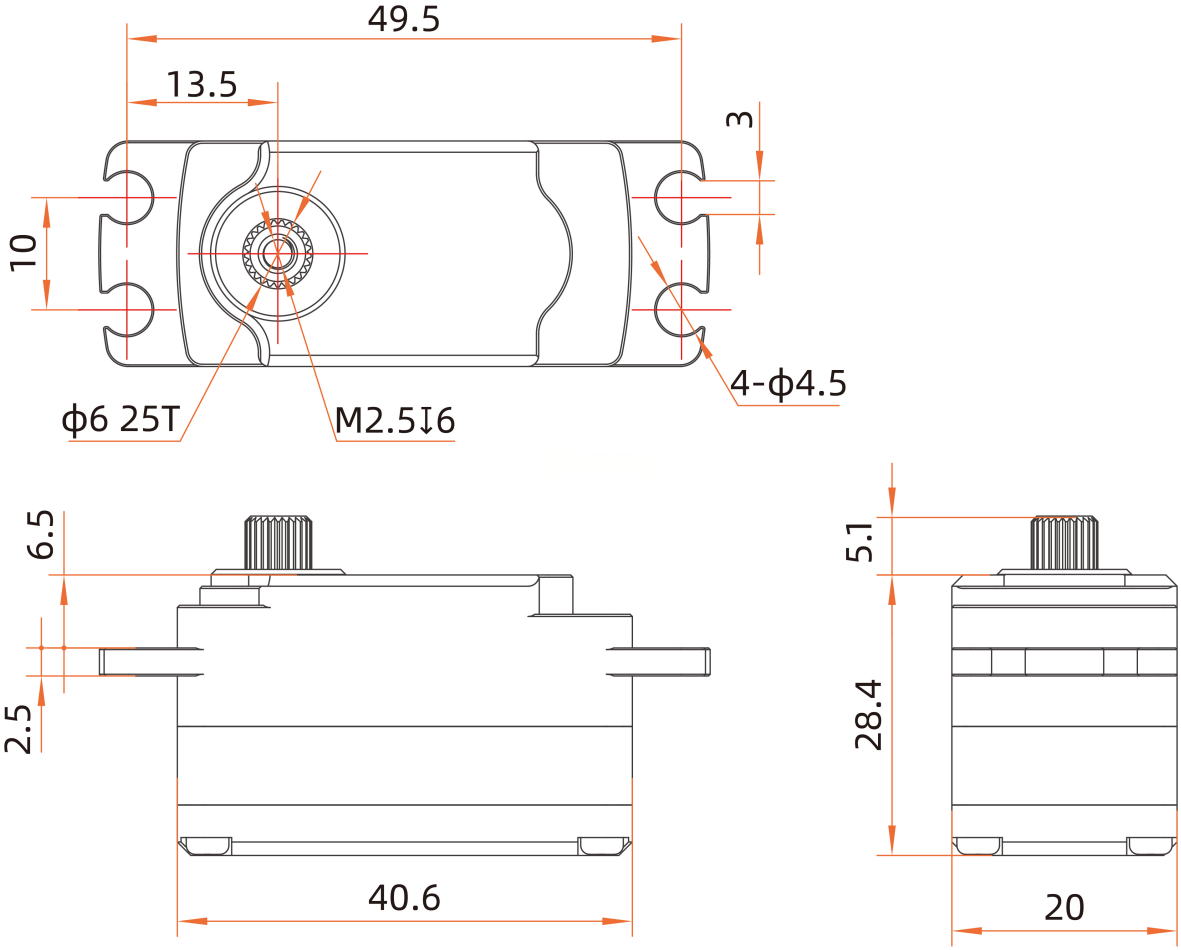
49.5
13.5
3
10
4-ϕ4.5
ϕ6 25T
M2.5↧6
6.5
2.5
40.6
5.1
28.4
20